شرکت مازیار صنعت تولید کننده تجهیزات توزیع، انتقال و روشنایی برق

نقشه فنی پایه پرچم ۲۴ وجهی با ضخامت ۵۰ میلیمتر

شرکت تولیدی مازیار صنعت

Maziyar Industry Company

www.maziyarsanat.com

شرکت تولیدی مازیار صنعت

Maziyar Industry Company

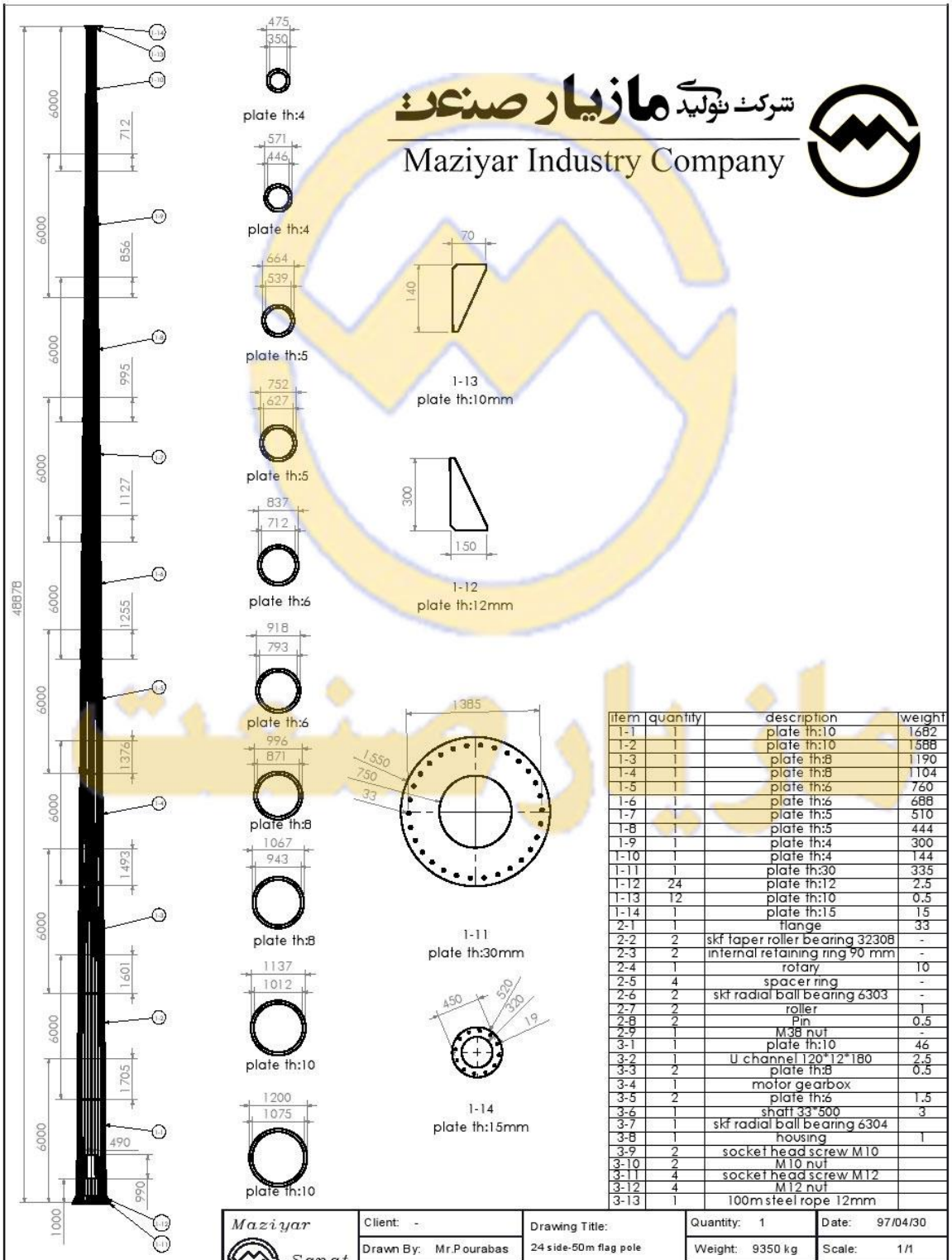

item	quantity	description	weight
1-1	1	plate th:10	1682
1-2	1	plate th:10	1588
1-3	1	plate th:8	1190
1-4	1	plate th:8	1104
1-5	1	plate th:6	760
1-6	1	plate th:6	688
1-7	1	plate th:5	510
1-8	1	plate th:5	444
1-9	1	plate th:4	300
1-10	1	plate th:4	144
1-11	1	plate th:30	335
1-12	24	plate th:12	2.5
1-13	12	plate th:10	0.5
1-14	1	plate th:15	15
2-1	1	flange	33
2-2	2	skf taper roller bearing 32308	-
2-3	2	internal retaining ring 90 mm	-
2-4	1	rotary	10
2-5	4	spacer ring	-
2-6	2	skf radial ball bearing 6303	-
2-7	2	roller	1
2-8	2	Pin	0.5
2-9	1	M38 nut	-
3-1	1	plate th:10	46
3-2	1	U channel 120*12*180	2.5
3-3	2	plate th:8	0.5
3-4	1	motor gearbox	
3-5	2	plate th:6	1.5
3-6	1	shaft 33*500	3
3-7	1	skf radial ball bearing 6304	
3-8	1	housing	1
3-9	2	socket head screw M10	
3-10	2	M10 nut	
3-11	4	socket head screw M12	
3-12	4	M12 nut	
3-13	1	100m steel rope 12mm	

Maziyar Sanat

Phone: +98-1135155

Fax: +98-1135155-354

e-mail: info@maziyar-s.com

web: Maziyar-s.com

Client: -	Drawing Title: 24 side-50m flag pole	Quantity: 1	Date: 97/04/30
Drawn By: Mr.Pourabas		Weight: 9350 kg	Scale: 1/1
Checked By: Mr.Masoomi		Revision: _	Unit: mm
Approved By: Mr.Heydari	Description:	Sheet: 1 of 1	Size: A4

Caution: This Drawing Is The Property Of Maziyar Sanat & Must Not Be Reproduced Without Our Written Agreement.

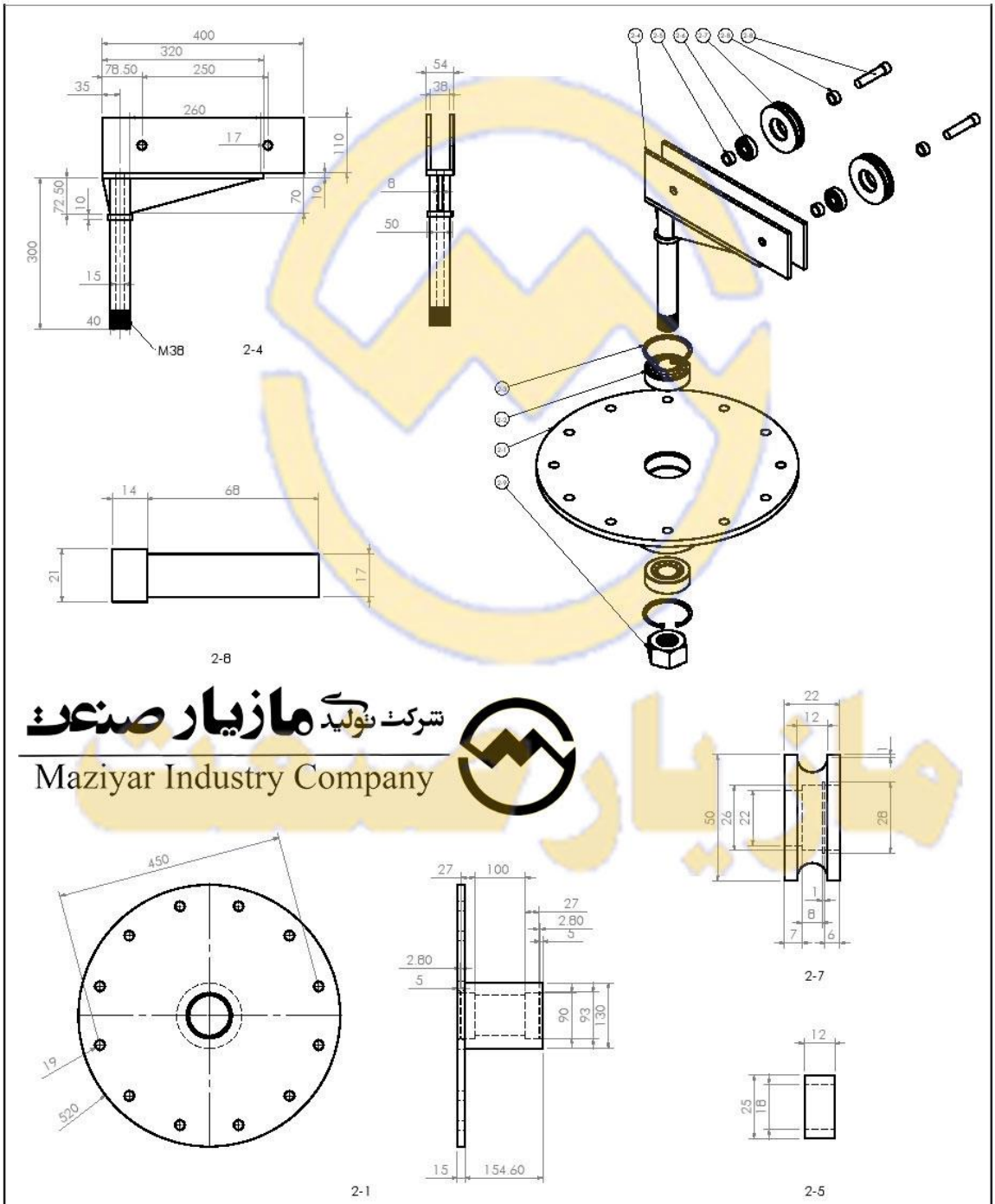

شرکت تولیدی مازیار صنعت

Maziyar Industry Company

Maziyar Sanat Phone: +98-113 5155 Fax: +98-113 5155-354 e-mail: info@maziyar-s.com web: Maziyar-s.com	Client: -	Drawing Title:	Quantity: 1	Date: 97/04/30
	Drawn By: Mr.Pourabas	24 side-50m flag pole	Weight: 9350 kg	Scale: 1/1
	Checked By: Mr.Masoomi		Revision: _	Unit: mm
	Approved By: Mr.Heydari	Description:	Sheet: 1 of 1	Size: A4
			Caution: This Drawing Is The Property Of Maziyar Sanat & Must Not Be Reproduced Without Our Written Agreement.	

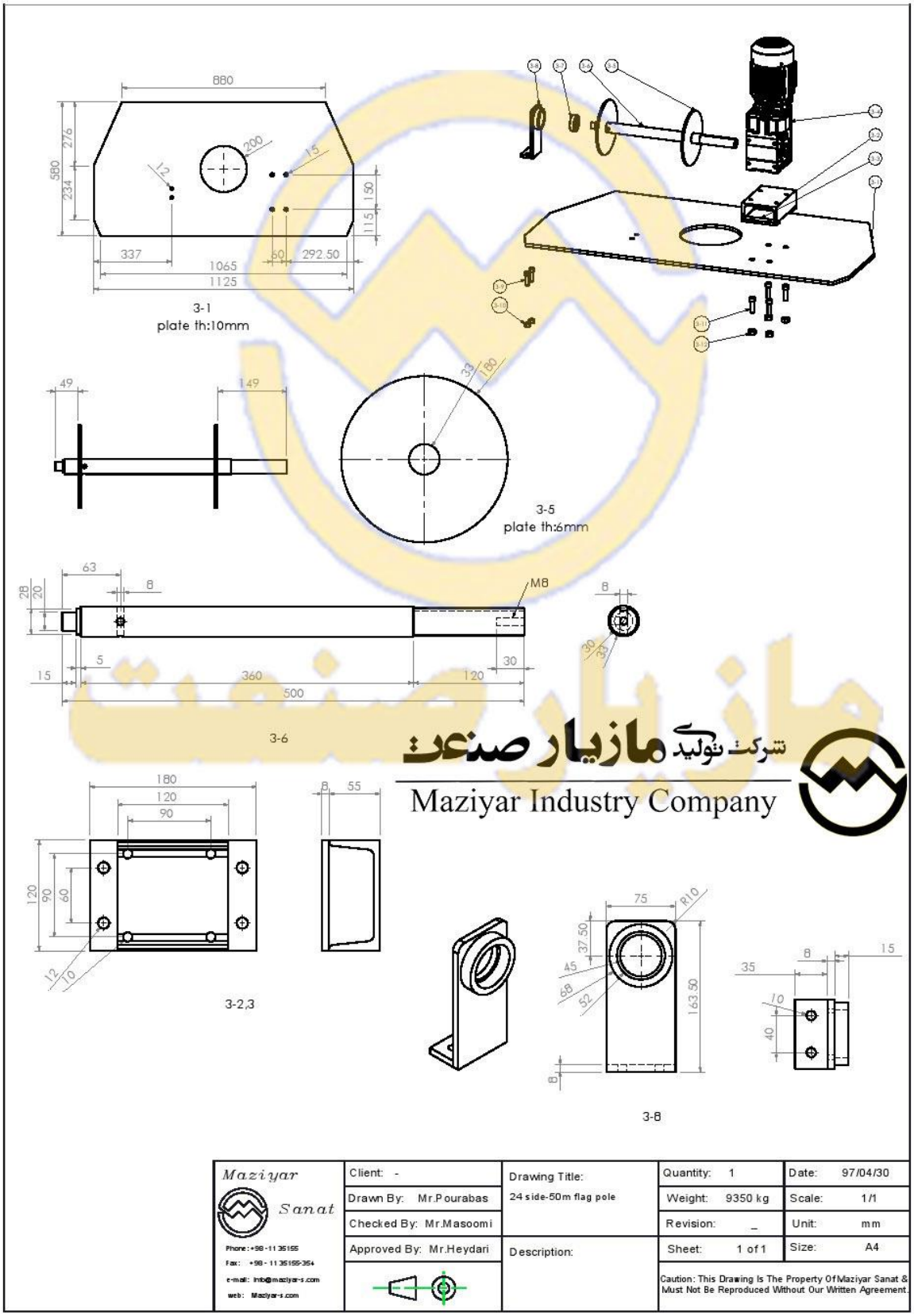
3-1
plate th:10mm
3-5
plate th:6mm
3-6
3-2,3
3-8
شرکت تولیدی مازیار صنعت
Maziyar Industry Company
Maziyar Sanat
Phone: +98-1135155
Fax: +98-1135155-354
e-mail: info@maziyar-s.com
web: Maziyar-s.com
Client: -
Drawn By: Mr.Pourabas
Checked By: Mr.Masoomi
Approved By: Mr.Heydari
Drawing Title:
24 side-50m flag pole
Description:
Quantity: 1
Weight: 9350 kg
Revision: _
Sheet: 1 of 1
Date: 97/04/30
Scale: 1/1
Unit: mm
Size: A4
Caution: This Drawing Is The Property Of Maziyar Sanat & Must Not Be Reproduced Without Our Written Agreement.